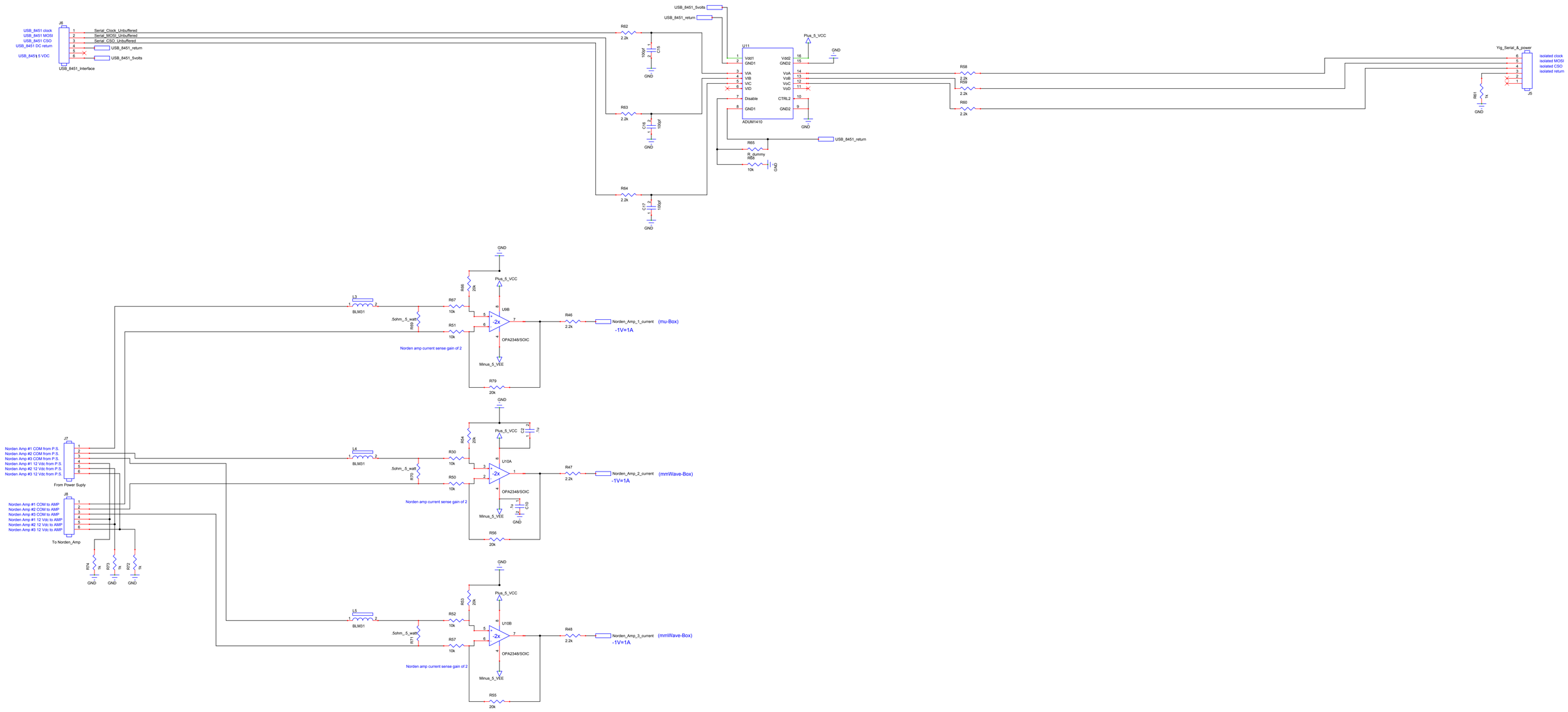

-D-	Caltech Submm		
Title:	Mu Box Monitor/Control Interface		
Project:	CSO synth L.O.	File: Root.sch	Page: 2/2
Number:	Doc. Number	Date: 06 July, 2011	Rev. : 3.0