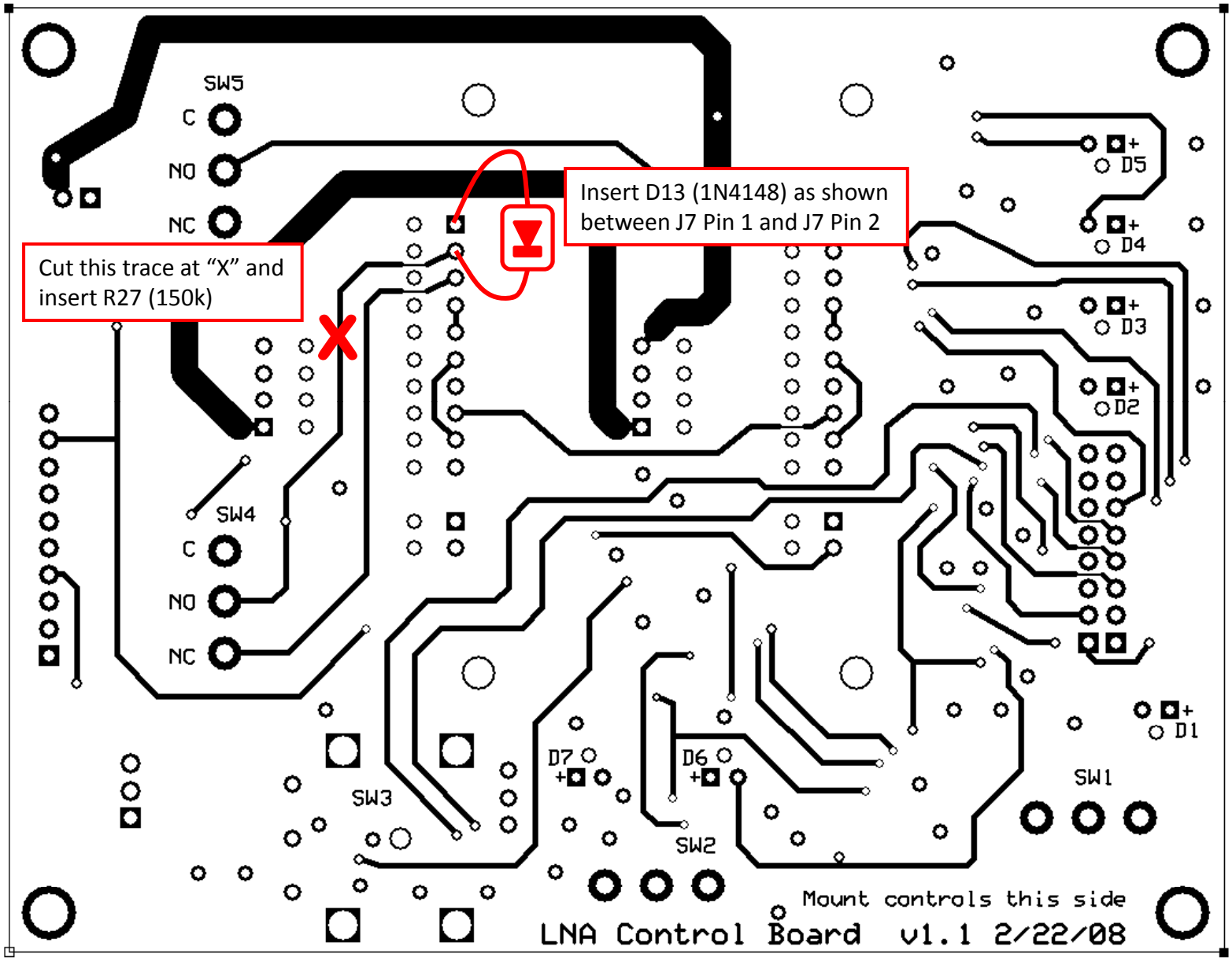
SW5
C
NO
NC
Insert D13 (1N4148) as shown between J7 Pin 1 and J7 Pin 2
Cut this trace at "X" and insert R27 (150k)
D5
D4
D3
D2
SW4
C
NO
NC
D1
D7
D6
SW1
SW3
SW2
Mount controls this side
LNA Control Board v1.1 2/22/08